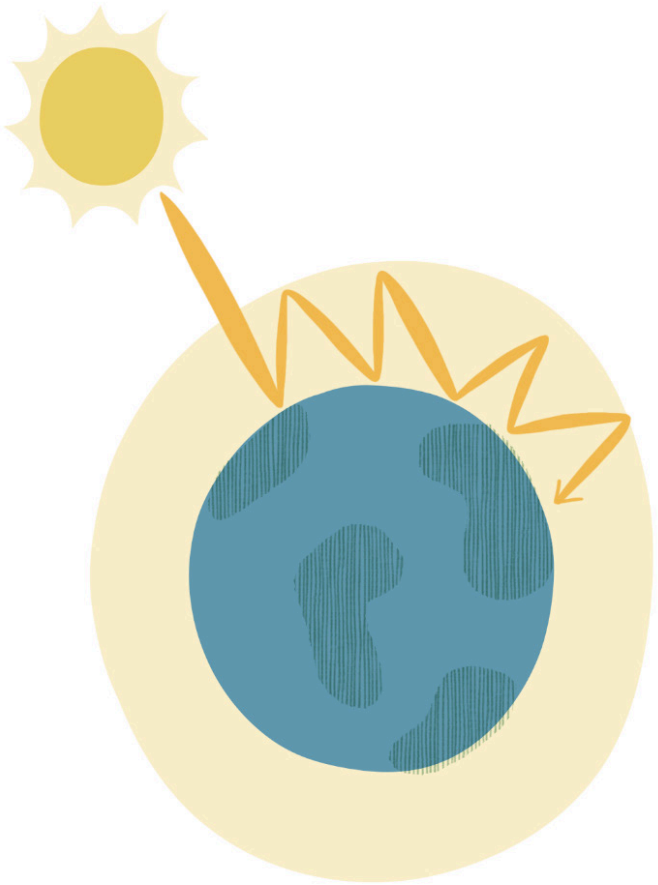

Climate Change: Understanding the Greenhouse Effect

Teacher Handbook

Microsoft Education and the University of Washington bring you a STEM course that challenges students to build sensors, analyze data, and grow real plants. Using affordable, hands-on, standards-aligned STEM activities, students discover the greenhouse effect.

This lesson engages students in the question: How does the greenhouse effect impact plants and the environment?

Microsoft Education

MHCI+D human-computer interaction + design

LESSON OVERVIEW

Learning goal: How does the greenhouse effect impact plants and the environment?

Suggested target age: 6-8th grade, 11-14 years

Time frame: One 50-minute class period + three additional 20 minute mini-sessions

STANDARDS

NGSS

MS-ESS3
Earth and Human Activity

MS-ESS3-3
Apply scientific principles to design a method for monitoring and minimizing a human impact on the environment.

MS-ESS3-5
Ask questions to clarify evidence of the factors that have caused the rise in global temperatures over the past century.

CCSS

RST.6-8.1
MP.2 6.EE.B.6
MP.2 7.EE.B.4

Background

In this lesson, you and your students will explore the greenhouse effect. They will model the way the Earth's atmosphere traps gasses that help keep the sun's energy inside. Students will consider both the positive and negative effects of the greenhouse effect and discuss how it has contributed to global climate change.

Learning Targets

- Demonstrate an understanding of how to construct a comparison scientific experiment
- Demonstrate understanding of how to collect and analyze data
- Demonstrate an understanding of how to use Arduino sensors
- Construct a working temperature and humidity sensor
- Research the factors that caused a rise in global temperatures

MATERIALS CHECKLIST

Materials per group of 3 students

- 3 sealable sandwich bags
- Plant seeds. Chia seeds work well but any resilient, fast-growing seed will work.
- Clip-on light source with at least a 100 watt bulb
- Water
- Vinegar
- Baking soda
- Napkins
- Scientific Notebook

SUGGESTED TEACHING TIMELINE

First Day: Lesson introduction, prior knowledge, vocabulary, planting.

Second Day: Connect the sensors to the laptop to start data collection, conduct sunlight experiment.

Several days later: Check back with the plants, track their growth, and compare their temperatures and humidities.

Time-Saving Options

- Prepare the plants about a week before you plan to teach the lesson, and allow them to grow. The first and second days can be condensed into one class period.
- Use this lesson as a companion for a larger unit, and skip the Prior Knowledge and Vocabulary sections
- Make the Prior Knowledge and Vocabulary sections group work

Students may have different levels of familiarity with concepts such a greenhouse gases. Use the Added Challenge or Extra Help options to scale the lesson up/down accordingly.

Added Challenge

Ask students to take their plant environment home and put it in a sunny spot. Their daily tasks are to:

1. Take a picture of the plant every day
2. Measure the plant's growth.
3. Record their observations in their science and engineering notebooks.
4. After one week, introduce the vinegar and baking soda mixture to the regular greenhouse environment, and repeat steps 1-3 for 5 more days.

Extra Help

Rather than collecting data in groups of three, collect data as a class using one of the experiments as a demonstration. Students are free to follow along by collecting their own data or simply watch the demonstration plants.

RESOURCES

Depending on where this lesson falls in your earth science unit, you may want to open or conclude the class with group discussion questions such as:

- What is climate?
- How are climate and weather different?
- If temperatures on earth rise due to increased greenhouse gases, how might different ecosystems be affected?

Use these resources to explore more information on greenhouse gases and climate change:

TedTalk: Climate change: Earth's giant game of Tetris

EPA - A Student's Guide to Global Climate Change

Scholastic - Climate Science

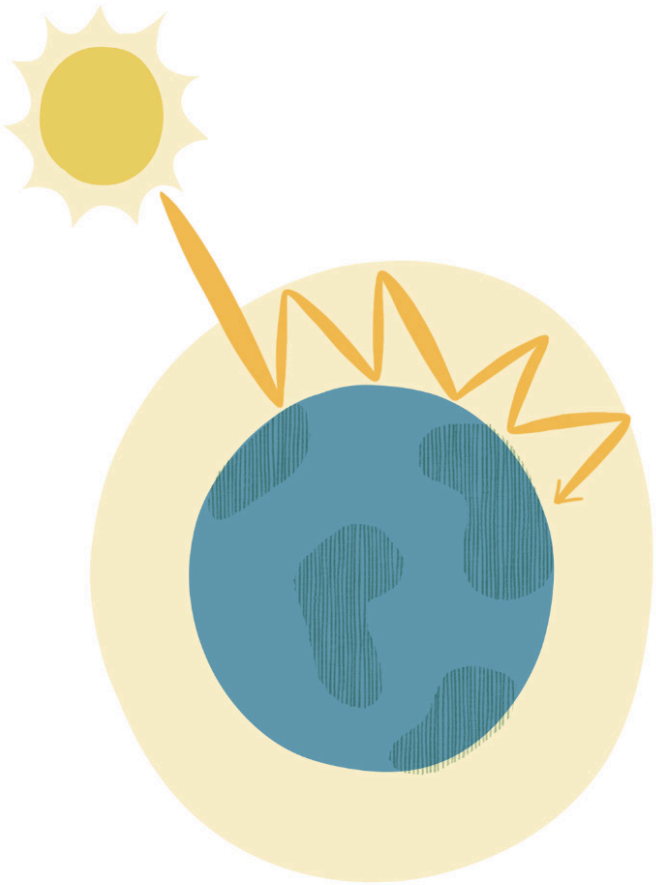

Climate Change: Understanding the Greenhouse Effect

Student Handbook

THE GREENHOUSE EFFECT

Your Mission

The town of Dimsdale notices that their Chia plants have been dying off but don't know what's causing it. They suspect it may have something to do with the amount of CO_2 in the air. They ask your team to investigate by testing out three separate atmospheric environments to grow chia plants in: an open air container, an enclosed container (greenhouse), and an enclosed container with added CO_2 (baking soda & vinegar).

Experiment with different nurseries to find out which one makes for the best growing environment.

Science and Engineering Notebook

Use your science and engineering notebook to record ideas and findings. Add drawings, photos, and video to your descriptions.

Prior knowledge

1. What do plants need in order to survive and grow? List everything you can think of.
2. Describe how a greenhouse works to help a plant grow?
3. Without looking anything up, give your best definition of the greenhouse effect?

Vocabulary

Research the vocabulary terms listed below using the internet and write a definition for each in your own words. Add sketches and drawings to help clarify your answers. This will give you some background information on the greenhouse effect.

- Greenhouse gasses
- Atmosphere
- Solar energy
- Climate change

MATERIALS CHECKLIST

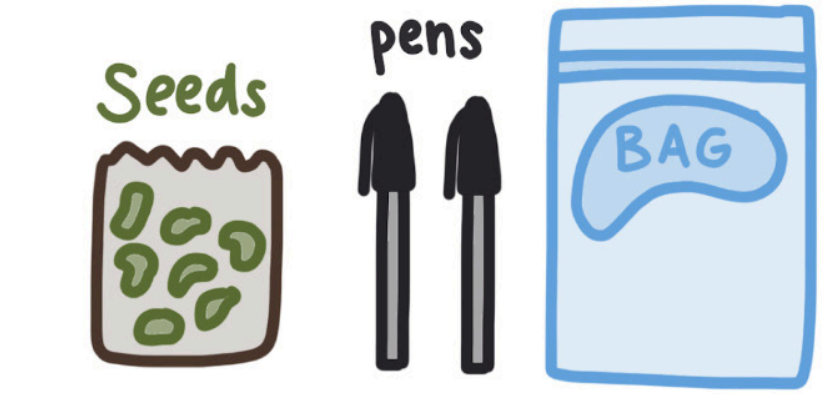

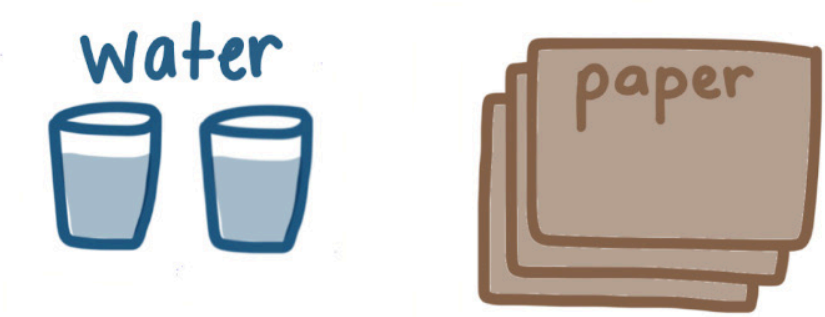

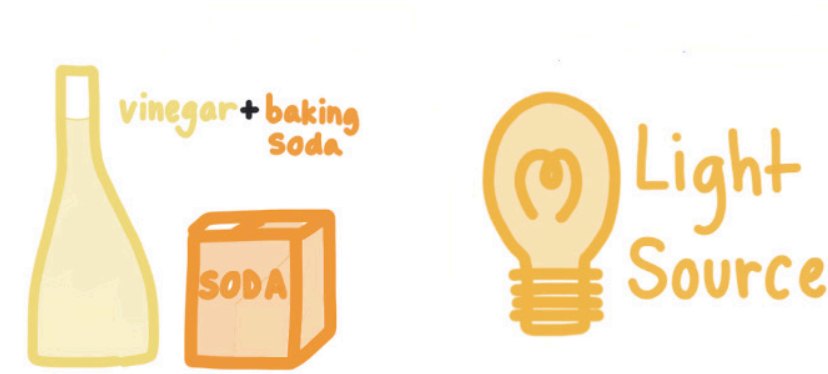

Materials per group of 3 students

- 3 sealable sandwich bags
- Plant seeds. Chia seeds work well but any resilient, fast-growing seed will work.
- Clip-on light source with at least a 100 watt bulb
- Water
- Vinegar
- Baking soda
- Napkins
- Scientific Notebook

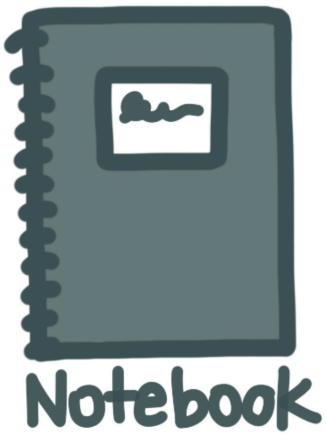

BUILDING YOUR PLANTERS

Step 1: Gather materials

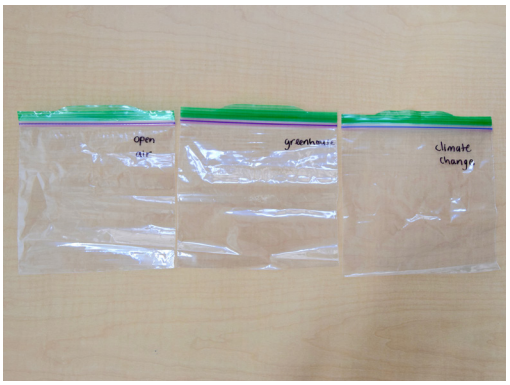

Step 2: Label 3 bags as open air, greenhouse, and climate change.

Step 3: Wet 3 paper towels

Step 4: Put a wet paper towel in each of the bags. Then, take a spoonful of Chia Seeds and spread them on top of the paper.

Step 5: Pour a little bit of extra water in the bags. Place the open air bag aside (don't close it). Seal the greenhouse bag and set aside.

Step 6: Combine a small amount of vinegar and baking soda into the climate change (CO_2) bag and let CO_2 develop. Seal the bag. You will notice the CO_2 bag is a slightly inflated.

Step 7: Place your bags next to each other near a window (or on a table under a lamp).

ARDUINO MATERIALS

The arduino is a small computer that you can combine with other components to make your own scientific instruments. The Arduino can be outfitted with sensors in order to sense its environment.

Today, you'll be adding temperature and humidity sensors to your Arduino to make a greenhouse effect detector. Once your set up is complete, you'll connect the Arduino to your computer, download the code, and see how your sensor works.

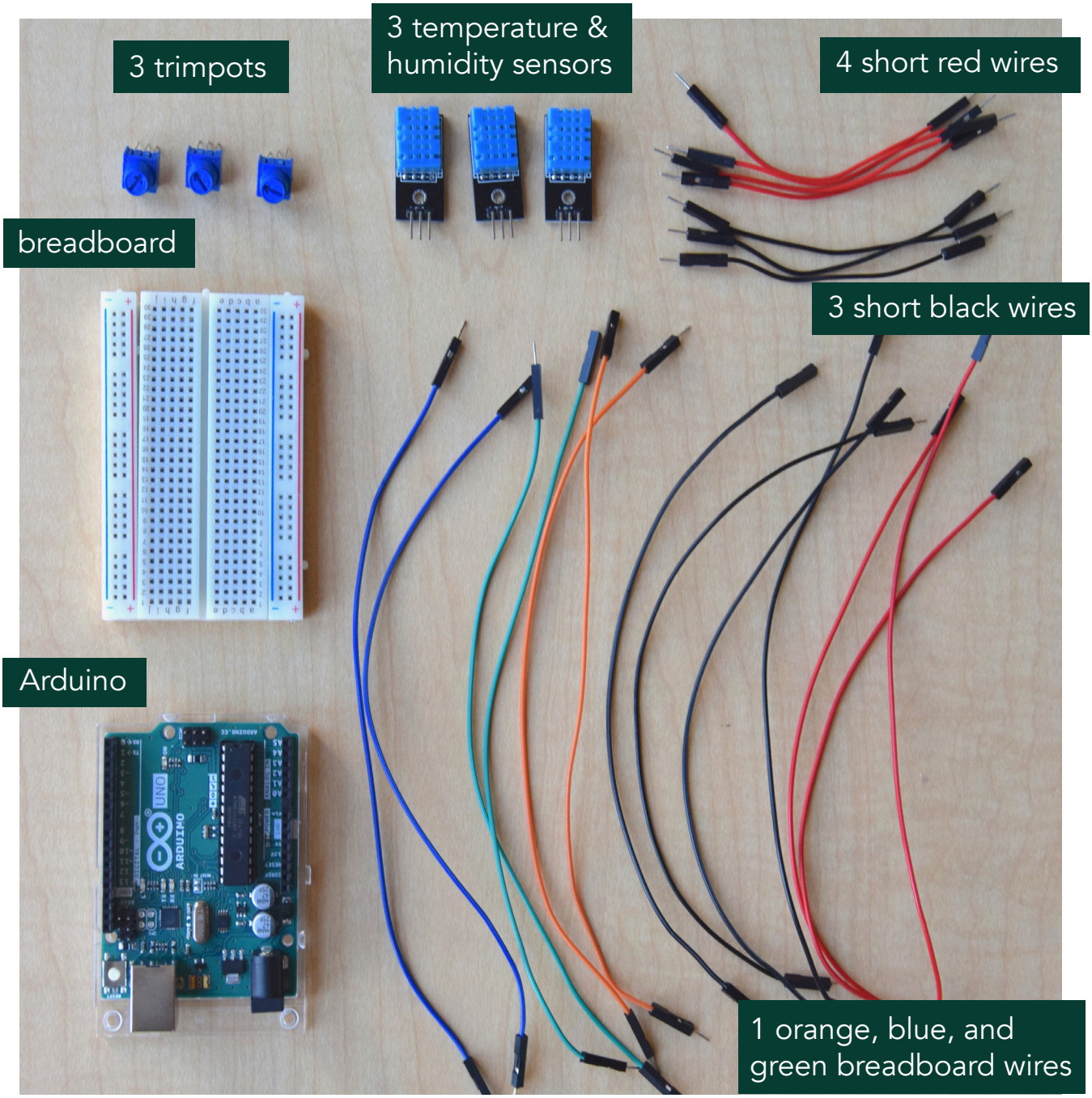

BUILDING YOUR SENSORS

STEP 1

Set up your 3 temperature & humidity sensors. You'll color code each sensor's middle wire like this:

Open-air = blue
Greenhouse = green
Added CO_2 = orange

Then, add a red wire to the + side of your sensor, and a black wire to the - side of your sensor.

Note: make sure you **don't plug in your arduino** until you finish building your sensor. Connecting your arduino early could cause your sensors to short out.

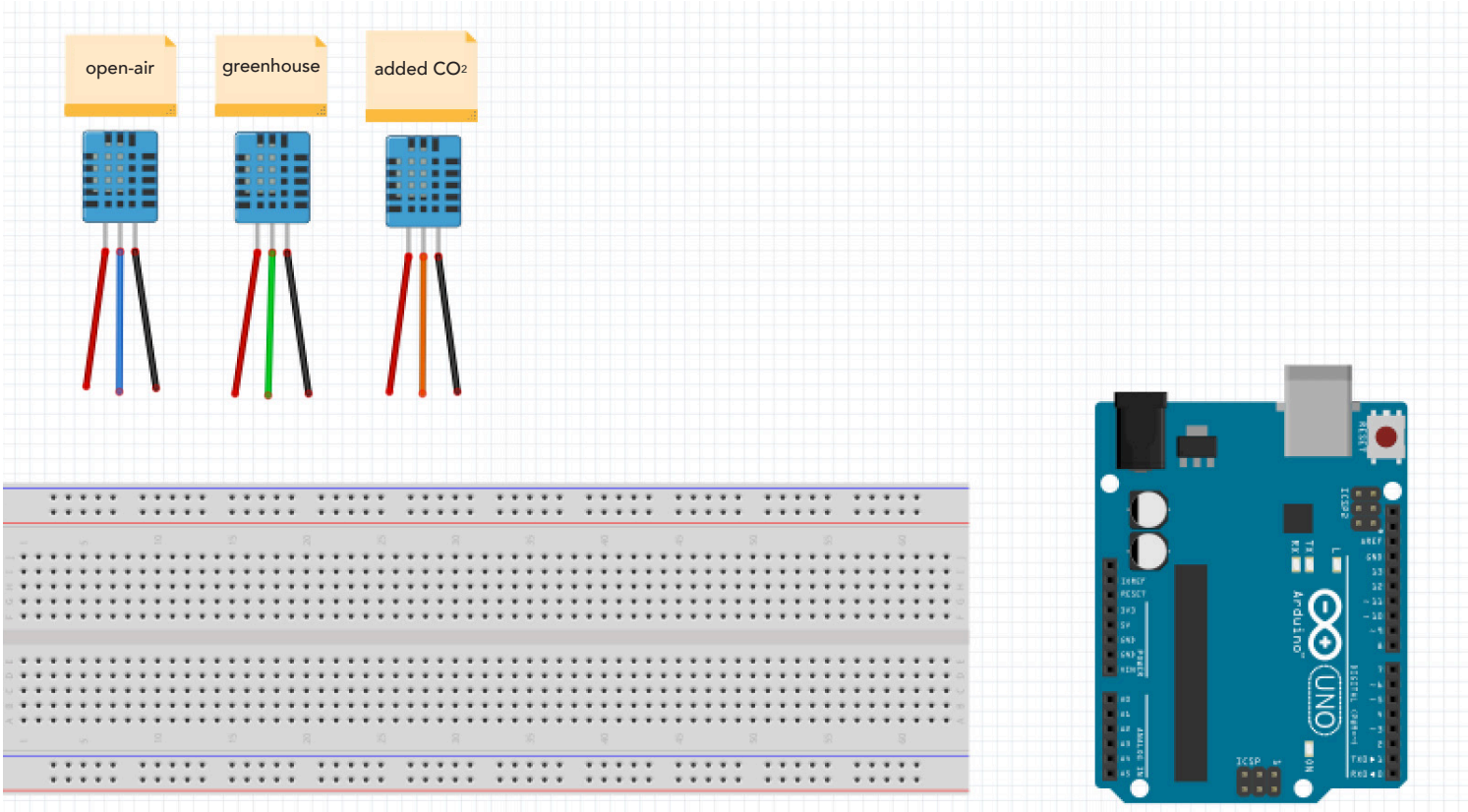

BUILDING YOUR SENSORS

STEP 2

Plug a red wire into 5V power on your Arduino and on one side of your breadboard [next to the red line].

Plug a black wire into GND on your Arduino on the opposite side of your breadboard [next to the blue line].

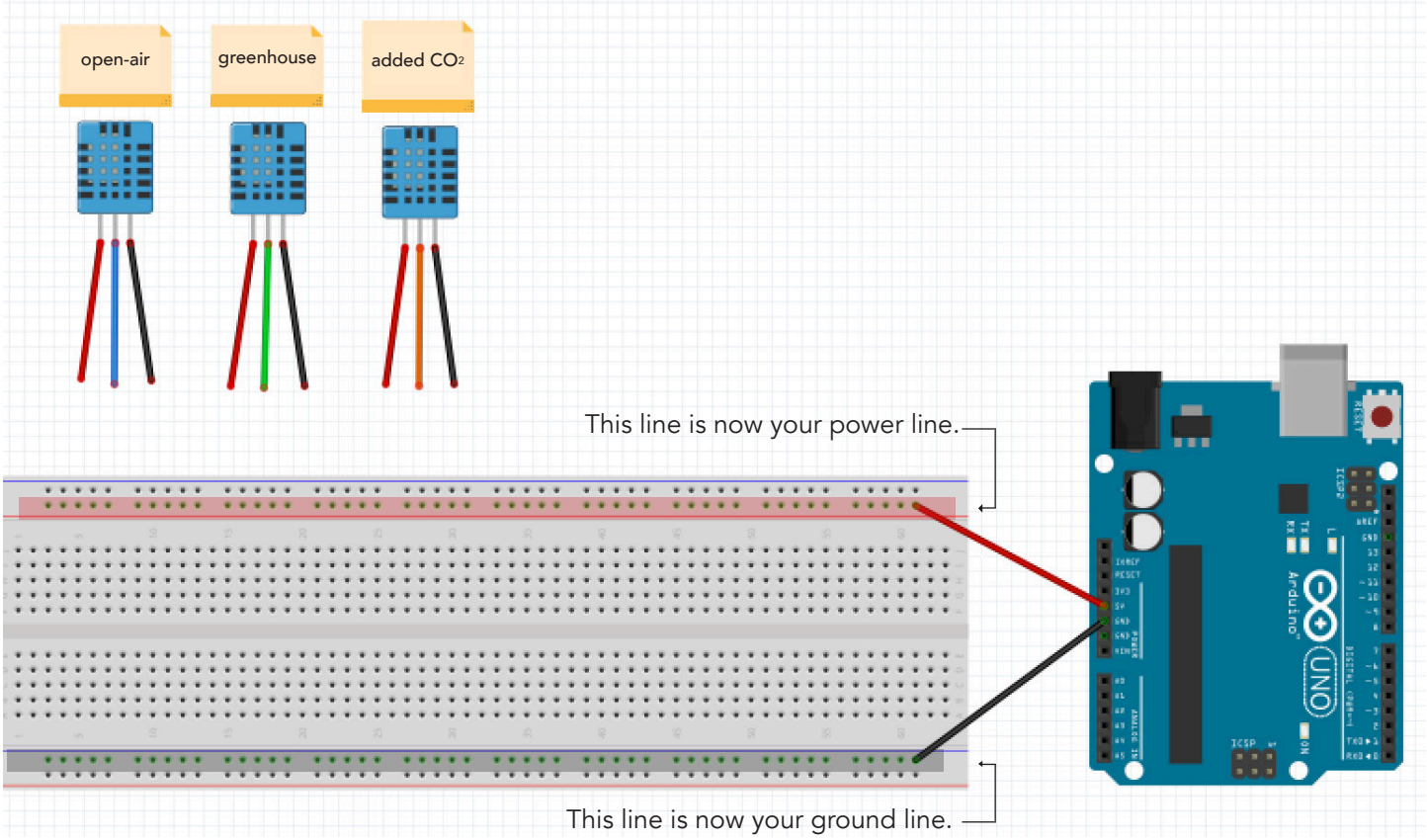

BUILDING YOUR SENSORS

STEP 3

Plug the temperature and humidity sensors' red wires into your power line.

Plug the temperature and humidity sensors' black wires into your GND line.

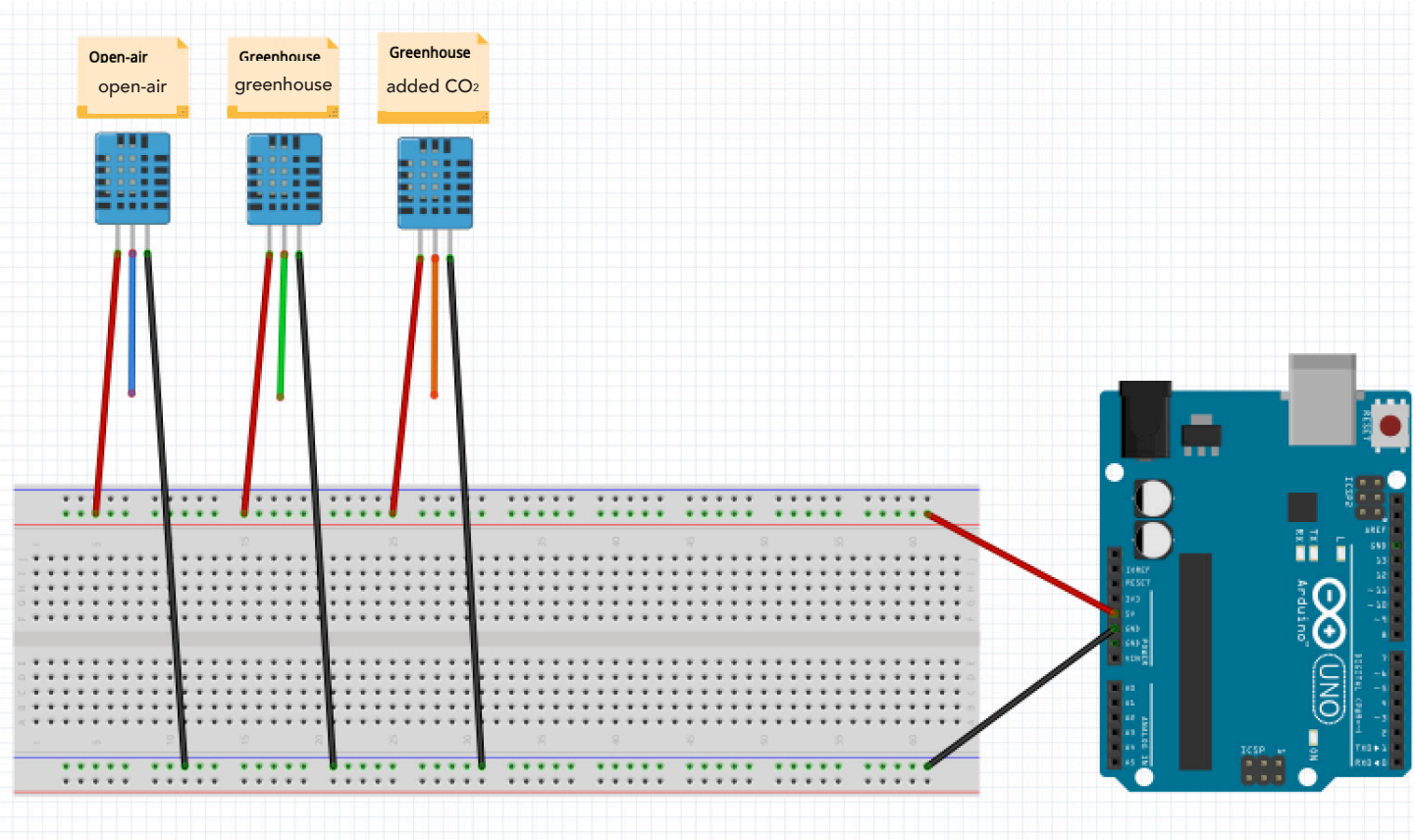

BUILDING YOUR SENSORS

STEP 4

Attach your middle sensors' wires into the following ports on your Arduino:

open air to AO
greenhouse to A1
added CO_2 to A2

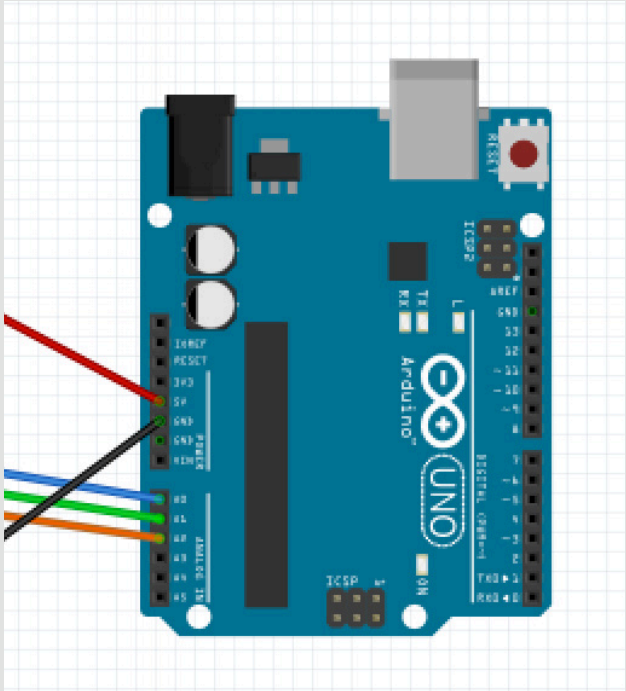

Here's what your Arduino ports should look like at the end of this step.

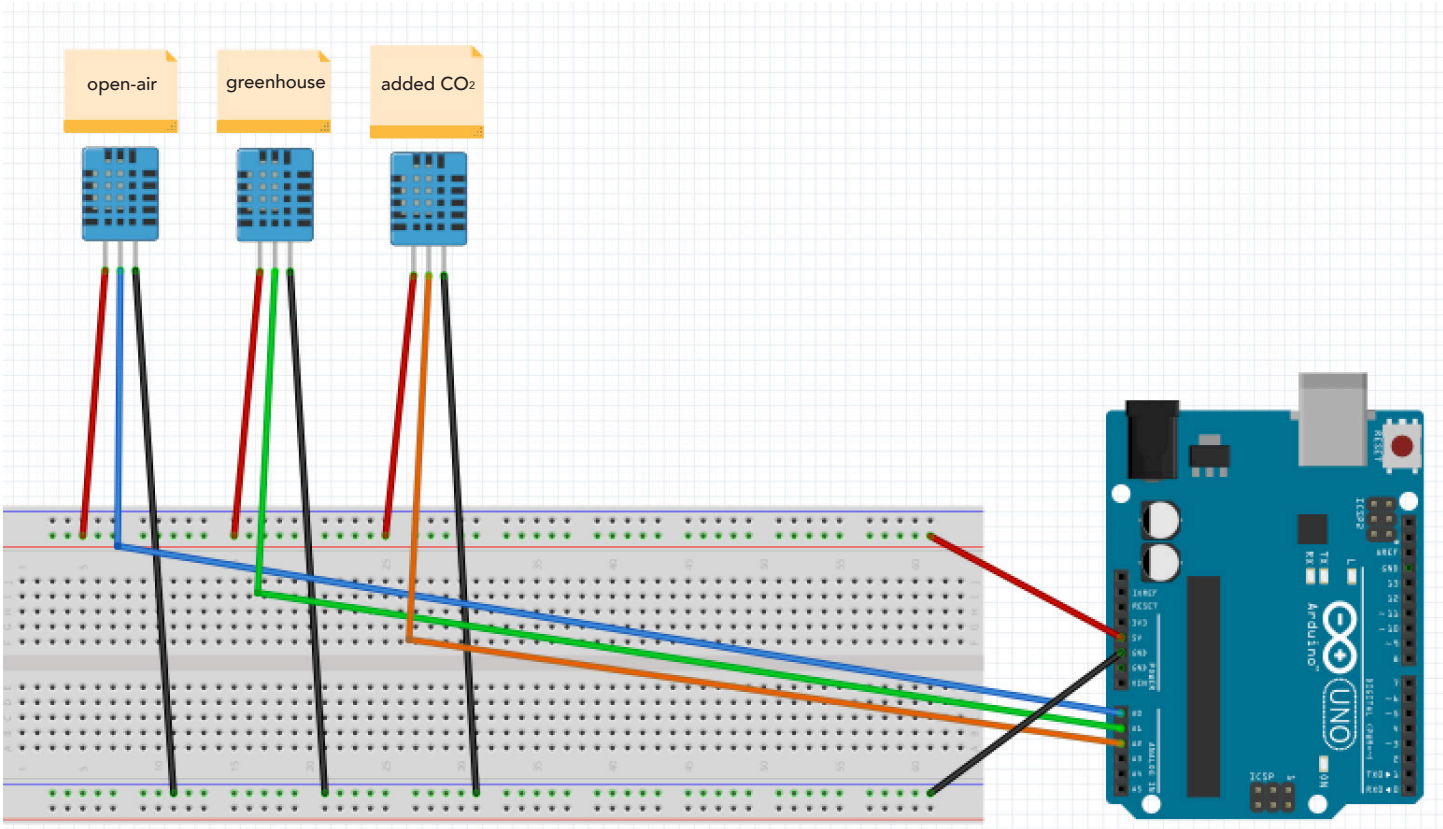

STEP 5

Plug the TrimPots anywhere in the middle section your breadboard. You'll need to be able to turn them so try to space them out.

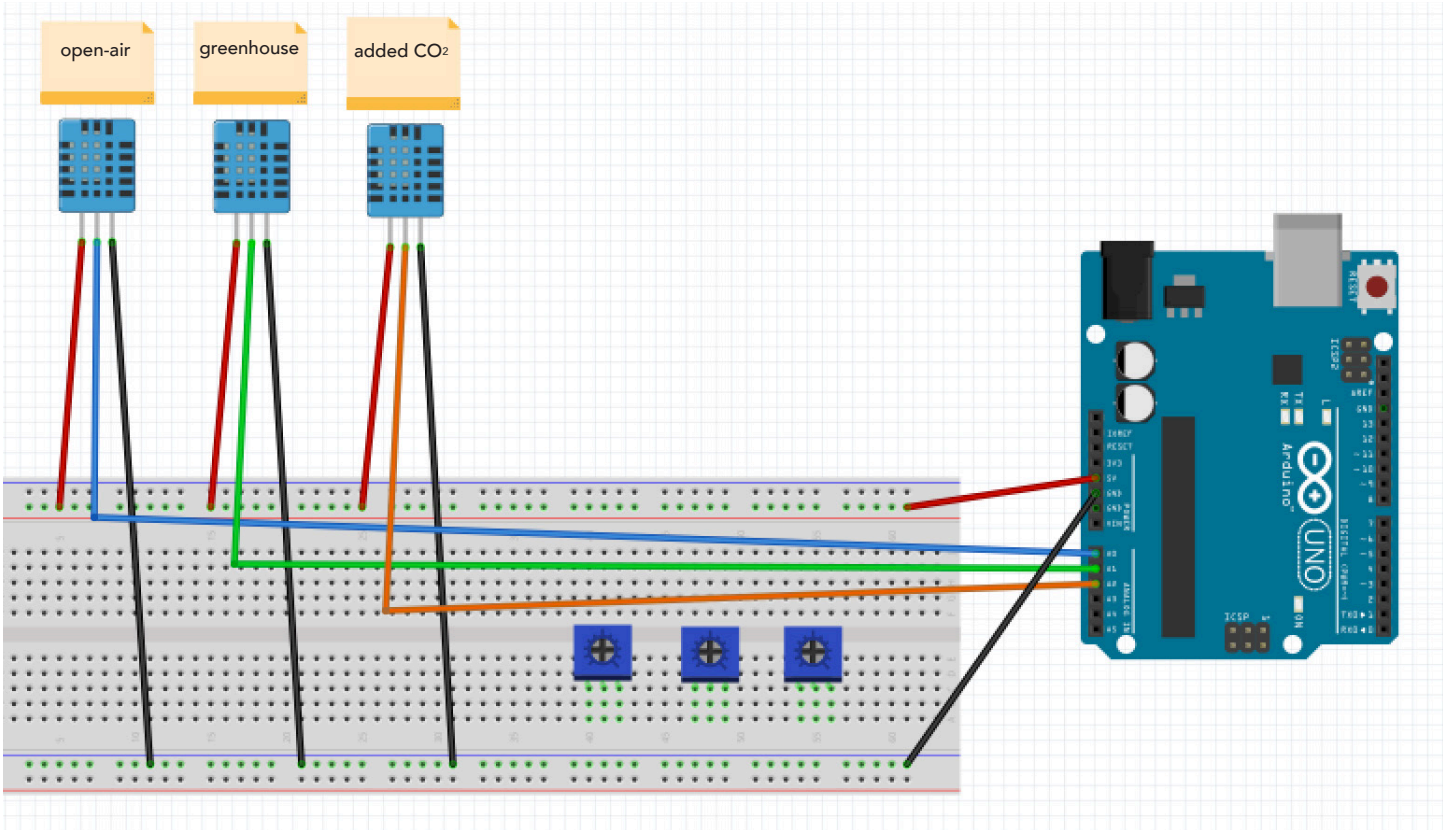

BUILDING YOUR SENSORS

STEP 6

Place a black wire in a hole below the left prong of your TrimPot. Repeat for the other 2 TrimPots, and then connect all the black wires to your ground line.

Place a red wire in a hole below the right prong of your TrimPot. Repeat for the other 2 TrimPots, and then connect all the red wires to your power line.

Note: the order of your red and black wires on your TrimPots are **reversed** from the red and black wires on your sensors.

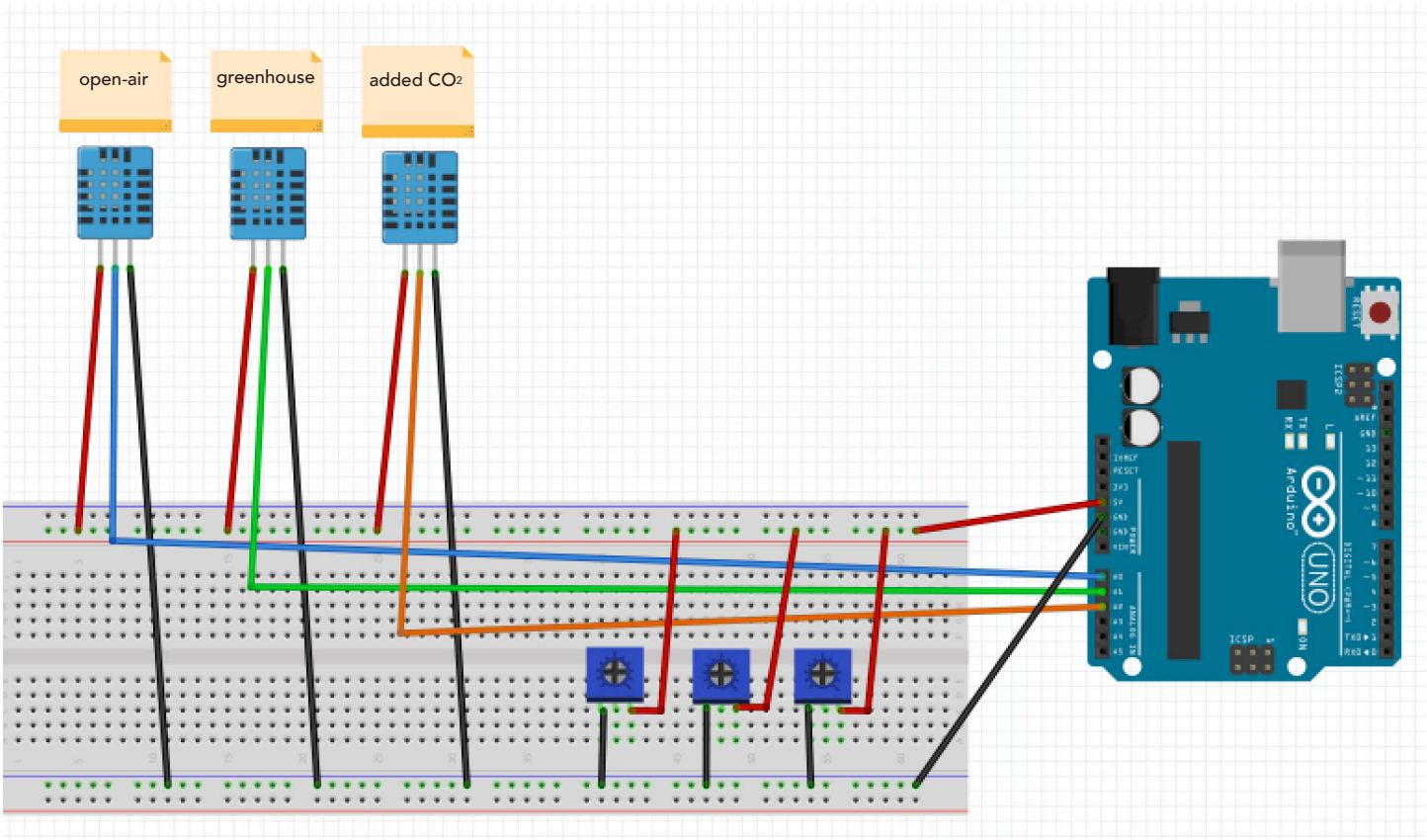

STEP 7

In a hole below the middle prong of your TrimPots, add the corresponding colored wire.

Attach the other ends into the following ports on your Arduino:
open air to A3
greenhouse to A4
added CO_2 to A5

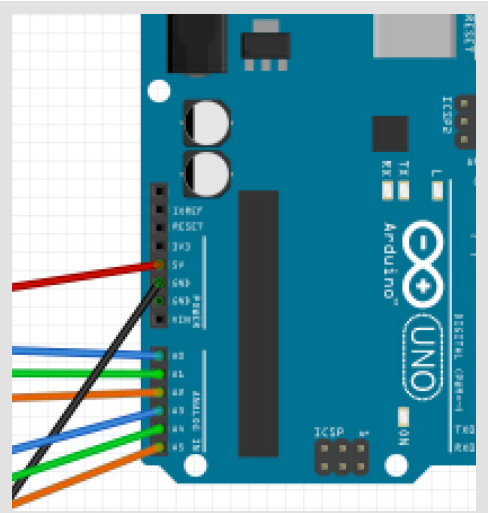

What your Arduino ports should look like at the very end.

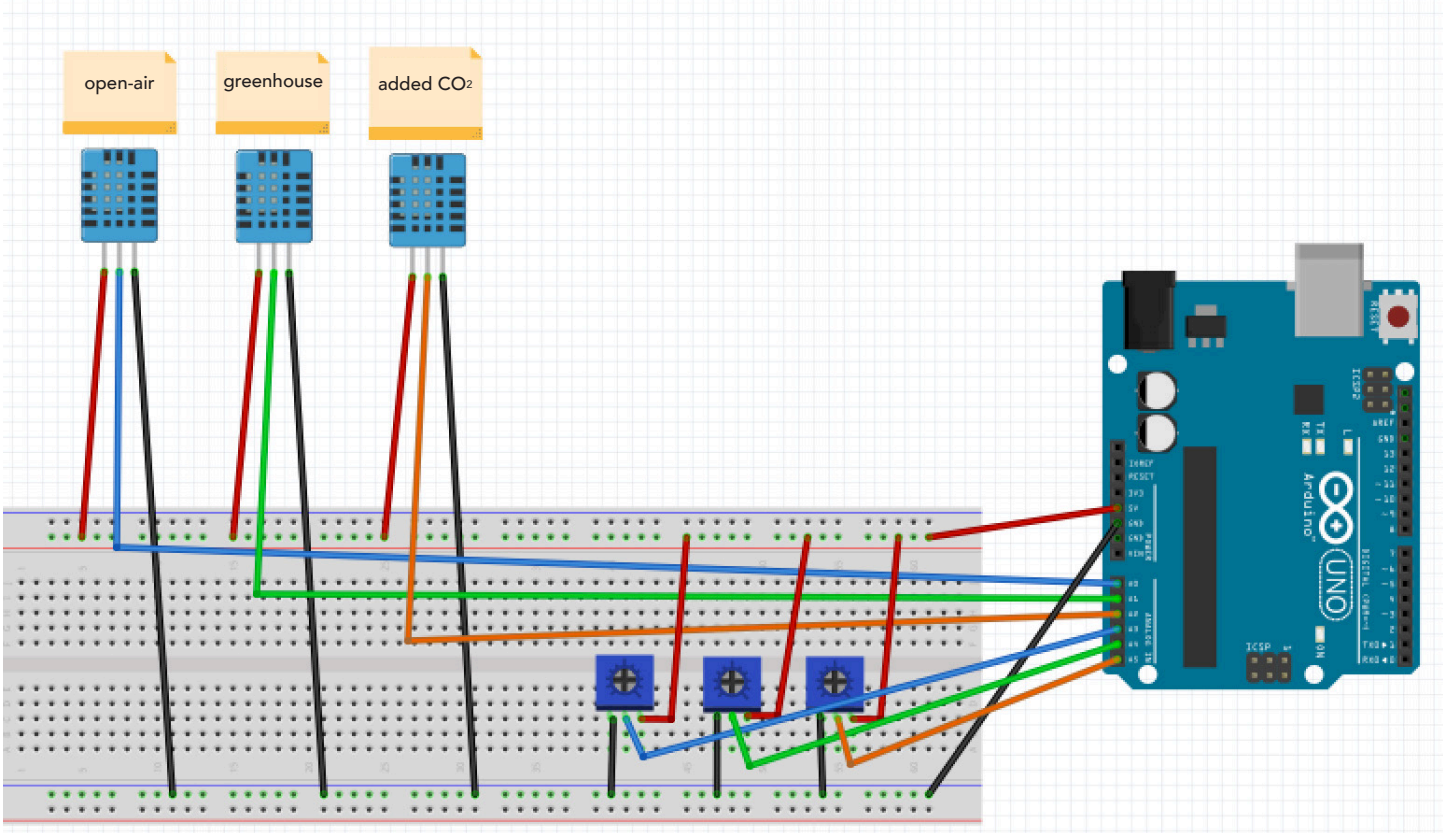

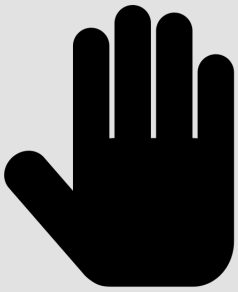

Before plugging your arduino into a computer, check the following:

- **Are all of your red wires on your power line, black wires on your ground line?**
- **All of your components should now be on your breadboard. If there are leftover pieces, check to make sure you didn't miss a step.**

TEST YOUR SENSOR

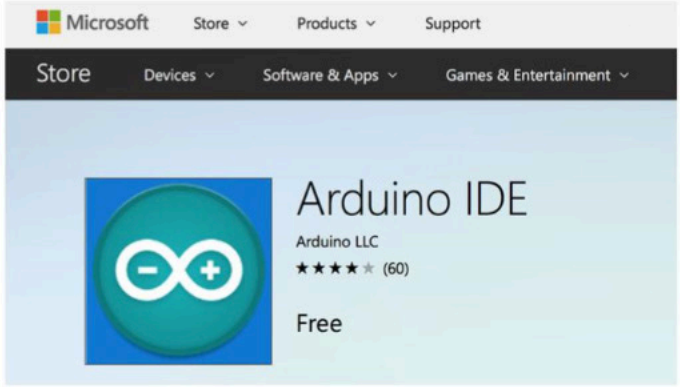

1 | Install the Arduino IDE from the Technical Requirement link on the lesson page at aka.ms/hackingSTEM or through the Microsoft Store. Follow prompts to complete the installation.

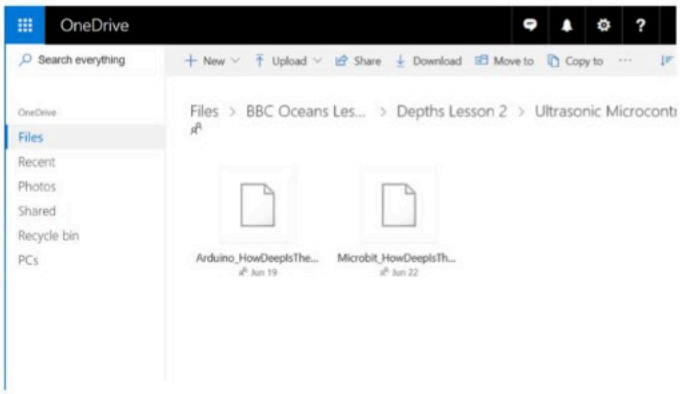

2 | Go and download the flash code.

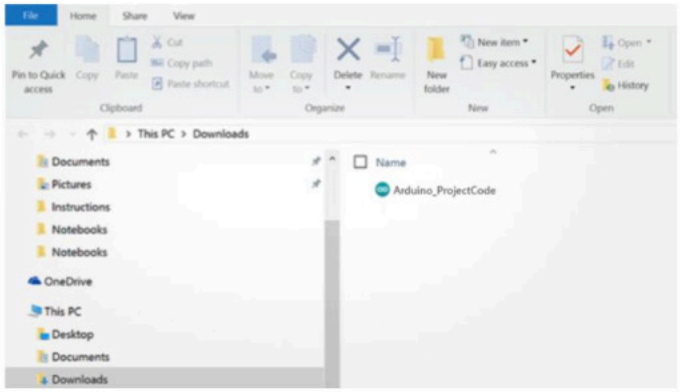

3 | Open the downloaded file to launch the Arduino app.

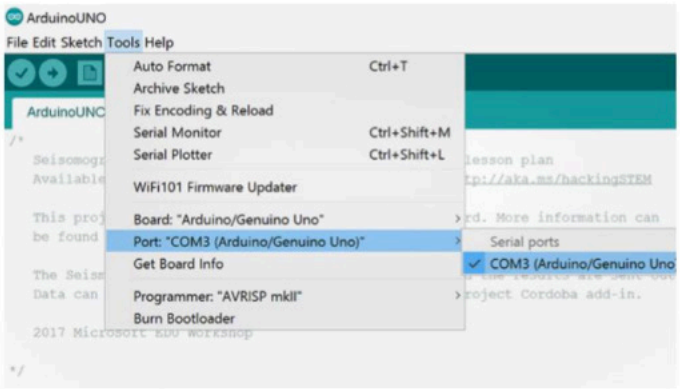

4 | In the Arduino app, select: Tools > Port > COM 3 (Arduino/Genuino Uno). Your port may be different than COM3.

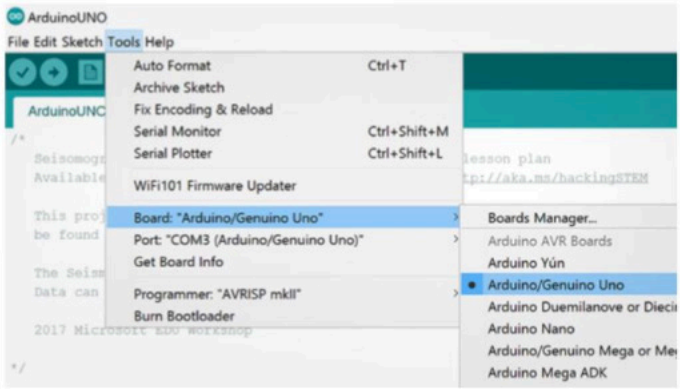

5 | Then select Tools > Board: Arduino/Genuino Uno.

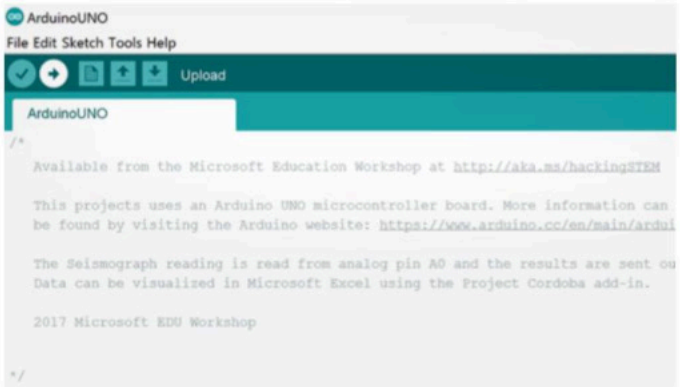

6 | Click on the circular right arrow button to upload.

EXPERIMENT 1 - Hot Stuff!

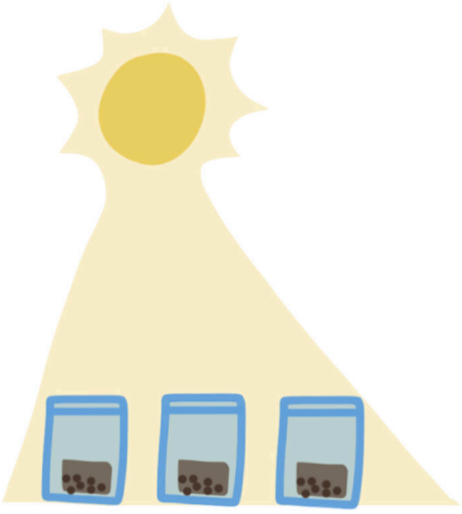

Hypothesis
How long will it take for the bags to heat up after they are placed in the sun? Will they heat up at the same rate or different rates?

Open-air: _____

Greenhouse: _____

CO2: _____

Explain your reasoning:

How long will it take for the bags to cool down after you take them out of the sun? Will they cool down at the same rate or different rates?

Open-air: _____

Greenhouse: _____

CO2: _____

Explain your reasoning:

EXPERIMENT 1 - Hot Stuff!

Procedure

1. Place a temperature and humidity sensor in each of your bags.
2. Put the planters in bright sunlight and record the temperatures every minute for about 30 minutes.
3. Place the planters in the shade (out of direct sunlight) and continue to record the temperature every minute for about 15-20 more minutes.

Analysis

Prepare the following items for a class presentation.

1. Analyze the graph showing the temperature in each planter during the entire observation period. Based on the graph, determine when you moved the jars from the sun to the shade.
2. Describe how your experiment modeled how air pollution affects global warming.
    A. Was there a greenhouse gas present?
    B. How fast did the planters heat up?
    C. How fast did they cool down?

EXPERIMENT 2 - Ready, Set, Grow!

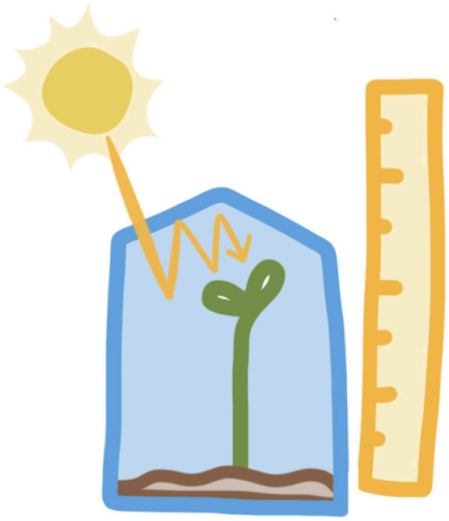

You already completed the setup for this experiment with your last one. Now we will analyze the plants over time as they grow.

Hypothesis
Let's come up with a hypothesis for which plant will grow the tallest.

Try writing a hypothesis for why each planter will make the plant grow the tallest, and then choose the one that you find to be the most compelling. Your hypothesis should be supported by evidence.

Procedure
1. Place your planters in an area that gets a lot of sunlight. Don't worry if it is a sunny day, UV rays will still reach your plant. If you don't have a sunny place for your plant, put it under a 100 watt light bulb.
2. Ensure that the sensors on each of your planters are functioning properly.

EXPERIMENT 2 - Ready, Set, Grow!

The open-air planter will work best because...

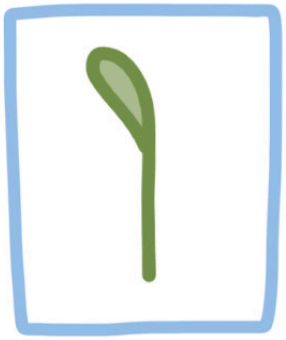

The closed planter will work best because...

The high CO^2 planter will work best because...

Now all you need to do is wait for the plants to grow!

Monitoring your Experiment
Over the next several days, take a few moments to check on your plants. Take photos of their progress, measure their heights with a ruler, and record them on the height graph. Be sure to water the open-air plant (the water is not trapped in a greenhouse and will evaporate).

Reflection
1. What other questions do you have about the **greenhouse effect** and its influence on climate and Earth's ecosystems?
2. What other questions do you have about **humans** and our influence on climate and Earth's ecosystems?